21 March 2002

Specification for monolithic crystal filter: **M Q F 1 0 . 7 - 0 6 3 0 / 0 8**

1. General

1.1. Package: 4 x GH 3 (each filter consists of 4 pcs. of matched duals)

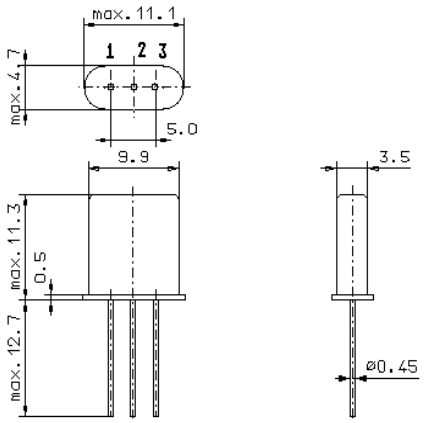

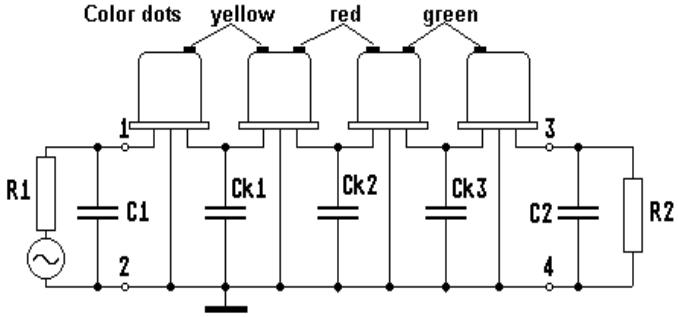

1.2.	Type name:	MQF 10.7-0630/08
1.3.	Number of poles:	8
1.4.	Operating temperature range:	-40°C to +85°C
1.5.	Storage temperature range:	-55°C to +105°C

2. Electric values

2.1.	Nominal centre frequency fo:	10.7 MHz
2.2.	**Pass band**	
2.2.1.	Bandwidth between 6 dB - frequencies:	≥ fo ± 3.15 kHz
2.2.2.	Ripple:	≤ 2.0 dB at fo ± 2.5 kHz
2.2.3.	Insertion loss: (measured on smallest attenuation in pass band)	≤ 4.0 dB
2.2.4.	Group delay distortion:	< 160 µs at fo ± 2.5 kHz
2.3.	**Stop band**	
2.3.1.	fo ± 7.0 kHz	≥ 60 dB
2.3.2.	fo ± 8.33 kHz	≥ 75 dB
2.3.3.	fo ± 25 kHz Alternate attenuation:	≥ 90 dB (except spurious)
2.4.	Terminating impedance (input and output):	2100 Ω // 2.5 pF
2.4.1.	Coupling capacitance Ck1,Ck3:	9.2 pF
	Ck2:	10.4 pF
3.	Marking:	manufacturer, date code MQF 10.7-0630/08
4.	Environment conditions:	Corresponding to Vectron standard CF001

Edited by: date: _____ name: _____